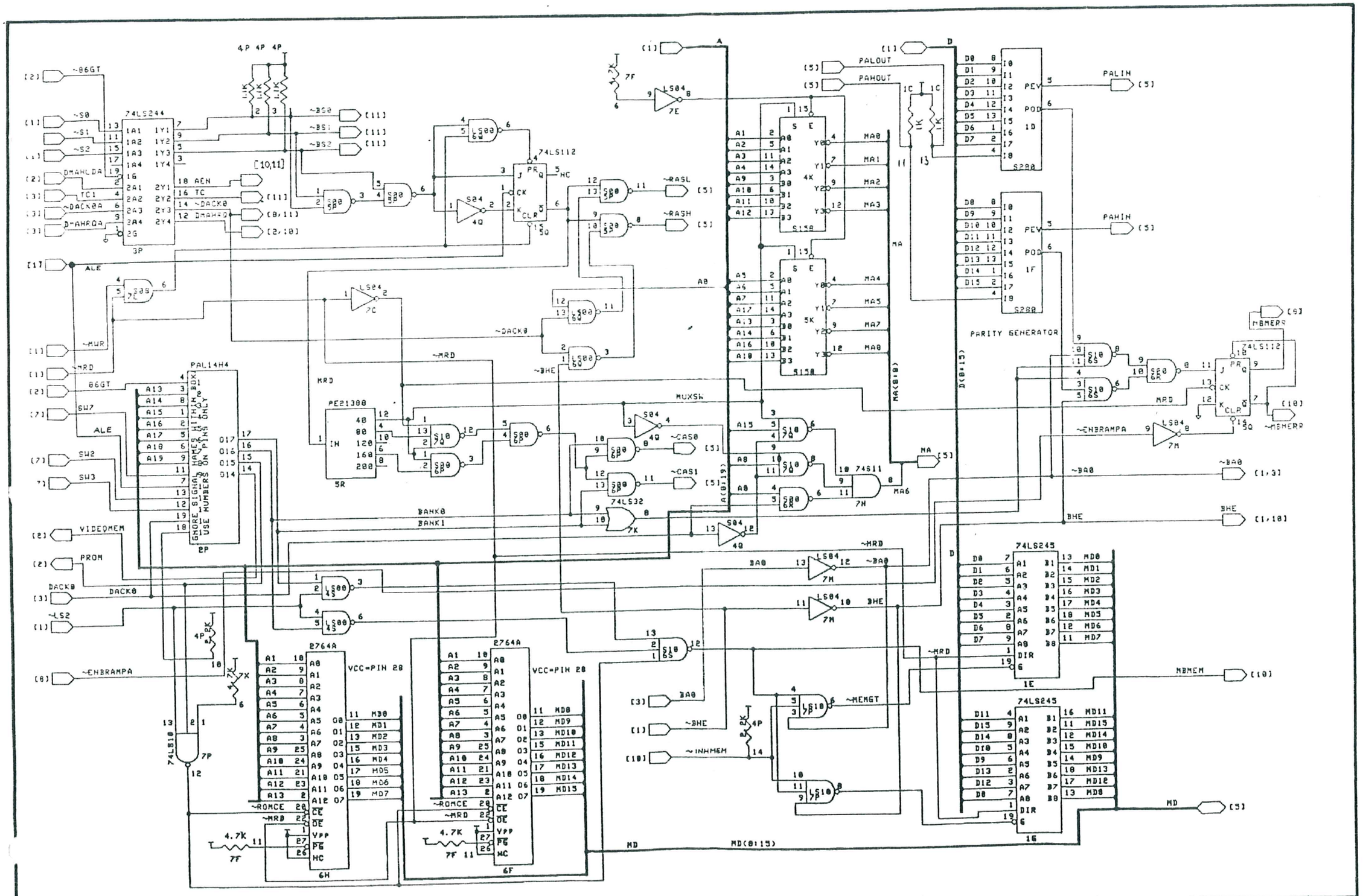
74LS244
74LS112
PAL14H4
PE21308
2764A
74LS245
74LS32
74LS11
4K
5K
S158
S280
PARITY GENERATOR
PALOUT
PAHOUT
PALIN
PAHIN
MBMERR
MBMEM
MUXSW
BANK0
BANK1
VIDEOMEM
PROM
DACK0
VCC=PIN 28
MD(0:15)
MA(0:9)
SOLO PER INFORMAZIONE
OLIVETTI PERSONAL COMPUTER M24
MOTHERBOARD
4/13