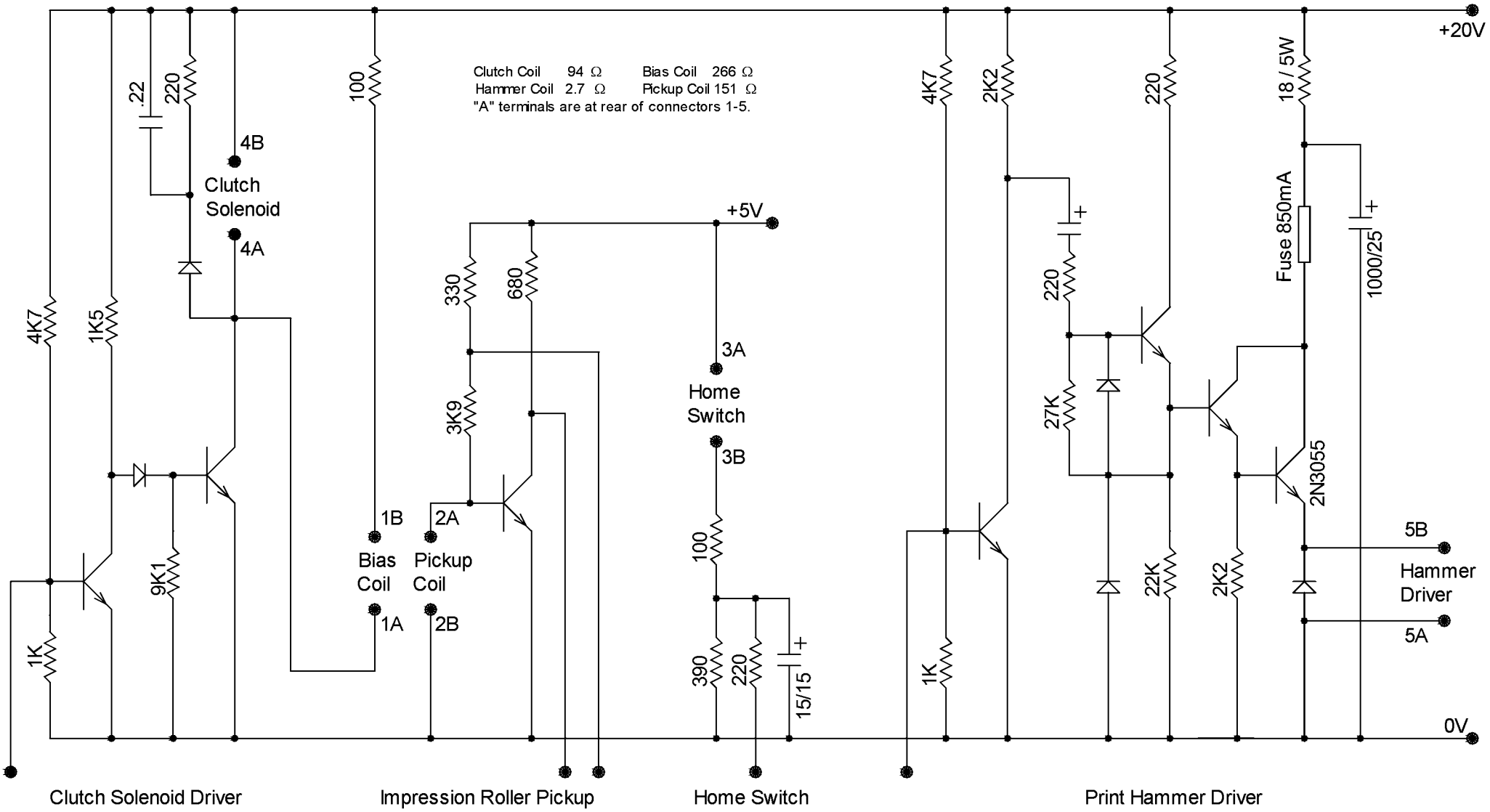

Logos 240 - Printer Interface

JW 17 Jun 2009