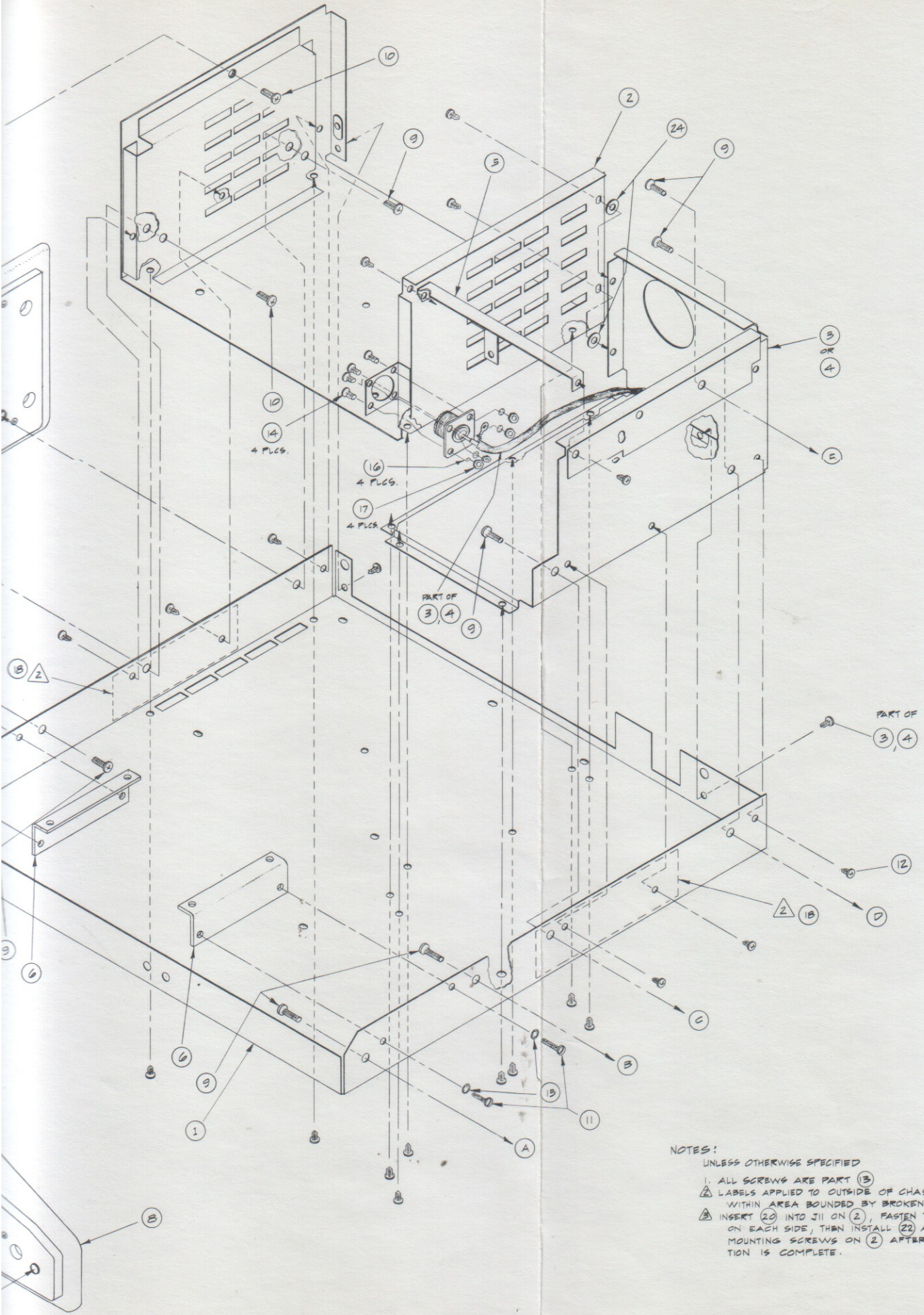

NOTES:

UNLESS OTHERWISE SPECIFIED

1. ALL SCREWS ARE PART (13)
2. LABELS APPLIED TO OUTSIDE OF CHASSIS WITHIN AREA BOUNDED BY BROKEN LINE
3. INSERT (20) INTO J11 ON (2), FASTEN TO (21) ON EACH SIDE, THEN INSTALL (22) AND (23). TIGHTEN MOUNTING SCREWS ON (2) AFTER INSTALLATION IS COMPLETE.

REF. DES.	PART O
27	
26	1010
25	102
24	
23	
22	1010
21	1010
20	1030
19	
18	
17	
16	
15	
14	
13	
12	
11	
10	
9	
8	1010
7	1010
6	1010
5	1010
4	1030
3	1030
2	1010
1	1010